TECHNICAL SHEET

ANTIBACTERIAL 2-WALL CORNER T-BAR

White

490360

PRODUCT DESCRIPTION

The 2-wall aluminium corner T-bar with a diameter of 30 mm horizontal and 25 mm vertical is mainly installed in a shower or bathtub area.
It allows you to cross the step of a tray or the edge of a bathtub, to keep your balance in a standing or sitting position, to get up and to transfer from one support to another.
Its antibacterial treatment guarantees optimal hygiene by reducing cross-contamination in public spaces.
It is sold with a clip-on sliding shower holder.
The bases and fixing covers are made of polymer.
This bar is reversible for more modularity.
It is delivered disassembled and has 4 fixing points.

PRODUCT ADVANTAGES

ANTI-BACTERIAL

CONCEALED FIXINGS

MADE IN FRANCE

TECHNICAL DATA
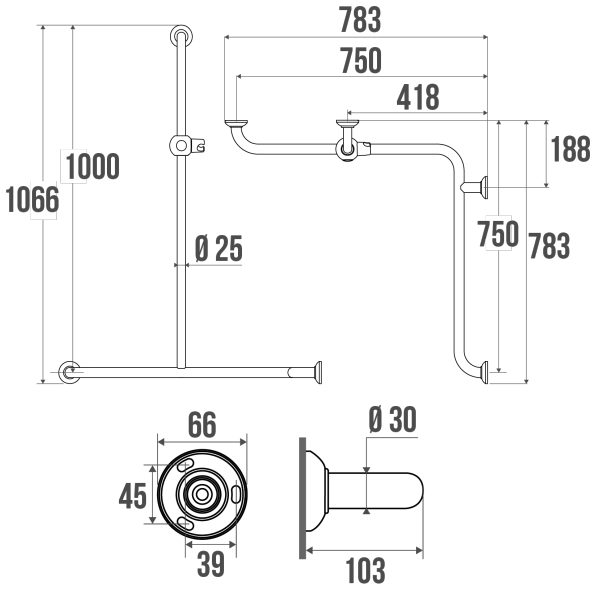
Load Capacity	150 kg
Product Type	T/L Bars
Range	ANTIBACTERIAL
Made in France	Yes
Eligible for my Adapt' bonus	Yes
Guarantee	10 years
Matter	Aluminium
Diameter	32 mm
Gencod	3563394903601
Weight	1.800 kg
Colour	White